fireline™

STOVES, PACKAGES AND SURROUNDS

Charlton & Jenrick LTD

# A warm welcome to the new **Fireline Stove Brochure**

I am delighted to be able to offer you a personal introduction to the latest Charlton & Jenrick Fireline stove brochure. Charlton & Jenrick continues to invest heavily in developing new additions to all our fire and fireplace product ranges and we now offer more choice and higher performance than ever before – all fully approved for the 2022 Ecodesign emissions and efficiency standards. Added for the first time in this edition are our new FQ5, Woodtec 5 Style and Woodtec 5W Style models, and low leg stands for the Woodtec range.

Wood log burners and multi-fuel stoves have become an effective, economical and low-carbon choice with an exciting visual flame picture that old designs simply could not offer. Alongside this is a national drive for improvement of environmental air quality which the industry has responded to with vigour. Official Stove Industry Alliance (SIA) Ecodesign compliant accreditation (www.stoveindustryalliance.com) is the result and C&J's entire stove ranges are now officially listed and accredited by this government recognised scheme. Ecodesign stoves can reduce particulate emissions (smoke particles) 90% below an open fire and 80% compared to an old stove. In recent years, we have gone even further with every Fireline stove achieving the highest level of the clearSkies certification scheme, clearSkies Level 5 certification (see page 3 for more information). Replacing open fires or old stoves is a local air quality benefit and you can choose any of our stoves with total confidence that they are amongst the top ranks of low emitting appliances in the world. Contrary to sensationalist rumours, there is to be no 'stove ban' in the UK and new, cleaner burning wood burners such as these are here to stay.

Fireline stoves use advanced, patented firebox combustion technology developed exclusively in our own UK laboratory, which results in very clean burning and highly efficient stoves. The fuel efficiency of our stoves begins at 78% and rises to 83% but that is only a small part of the story as our airwash and tertiary air profiling technology are an integral part of the low emission combustion process. Every model in the range easily achieves DEFRA exemption at less than 50% of the limit, on top of a clear pass on all Ecodesign 2022 emissions criteria,

Peter Mintoft
Managing Director

and clearSkies level 5 criteria. This is not the work of a moment but requires years of careful design being put into each appliance from conception to delivery of the final units.

Whether it is to be fuelled by wood, gas, electricity or smokeless briquettes, each unique stove design is constructed from 100% UK penned 3D CAD designs using the latest CNC laser profiling and steel production processes and the finest materials. Each product extensively utilises quality cast iron, stainless steel, mild steel, ceramic glass, refractories and high-grade heat-resistant coatings to give you an incredibly strong and durable product to rely on. Our stoves are designed and manufactured under independently certified ISO 9001 quality and ISO 14001 environmental management systems.

Fireline stoves are designed and engineered to be extremely efficient and environmentally friendly. To realise the full potential and low emissions from our stoves, we only recommend using top-quality fuel. The government-recognised Woodsure (www.woodsure.co.uk) Ready To Burn scheme ensures that consumers are able to obtain reliable supplies of quality firewood logs nationally.

Charlton & Jenrick's base here in Telford is a stone's throw away from the birthplace of the industrial revolution at Coalbrookdale and the World Heritage site of Ironbridge where the very origins of modern industry were forged. It is incredibly satisfying to be a small part of the great British industrial story, designing, developing and producing wood-burning stoves for the warmth of UK households.

**Peter Mintoft**
Managing Director

## Emissions and Performance Scheme Explained

ClearSkies is the new objective & independent emissions and energy performance certification mark for solid fuel stoves and fireplaces.

Originally initiated through the Stove Industry Alliance (SIA) and now an independent organisation, clearSkies purpose is to drive the development of cleaner and more efficient appliances and is open to all manufacturers of solid fuel stoves and fireplaces. The clearSkies board is made up of industry professionals, including representatives of the SIA, consultants and academics specialising in air quality and bioenergy. It is the only UK certification scheme that goes beyond the basic requirements of Ecodesign and includes DEFRA exemption.

### ClearSkies levels – how they work:

ClearSkies appliances are awarded from entry level 2 up to a maximum of level 5 according to their emissions and UK DEFRA exemption status. All stoves of Level 3 and above also include UK DEFRA exemption for burning wood logs in smoke control areas.

### Secure peace of mind – for today and tomorrow:

All C&J stoves achieve a minimum of clearSkies Level 4, and the vast majority achieve Level 5 to give you total peace of mind that you are investing in a state of the art wood burner with future proof performance. C&J are proud to have been amongst the founder members of the clearSkies scheme.

Scan the QR code for further details and our official product listings or visit: www.clearskiesmark.org/ ▶

## SIA Ecodesign Explained

The SIA (Stove Industry Alliance) used the services of a research company, Kiwa Gastec, whose report shows that modern clean burning Ecodesign stoves, including those in the Fireline range, can reduce particulate emissions by up to 90% compared to an open fire, and 80-84% compared to an old stove.

This finding is so important that SIA began an 'Ecodesign Ready' labelling scheme to promote stoves meeting the efficiency and emissions regulations early. Since 2017, the industry's main manufacturers, including Charlton & Jenrick, have ensured that all newly designed wood burning stove models meet European and UK environmental standards for particulate emissions.

Charlton & Jenrick invested in the design and development of the Fireline range of Ecodesign Ready stoves as long ago as 2013 to prepare for future tightening of regulations, with all stoves released from 2017 onwards meeting this certification criteria.

In doing so, new combustion optimisation ideas and techniques were perfected, resulting in a patent covering the tertiary air inlet system and several other innovations which were added within the products.

You can buy, safe in the knowledge that all the Fireline stoves you see in this brochure are certified SIA Ecodesign certified and Defra Exempt for Wood Burning in Smokeless Zones, as well as meeting the more stringent clearSkies certifications.

# Contents


6 Fireline Stoves – Key Features
8 Maximising the potential of your stove
10 FX4 multi-fuel stove
12 FX5 multi-fuel stove
14 FQ5 multi-fuel stove
16 FA5W multi-fuel stove
18 FP5W multi-fuel stove
20 FQ5W multi-fuel stove
22 FT5W multi-fuel stove
24 FX5W multi-fuel stove
26 FA8 multi-fuel stove
28 FP8 multi-fuel stove
30 FQ8 multi-fuel stove
32 FT8 multi-fuel stove
34 FX8 multi-fuel stove
36 FPi5 multi-fuel stove
38 FPi5W multi-fuel stove
40 FPi8 multi-fuel stove
42 Woodtec wood-burning stoves
44 Woodtec 5 wood-burning stove
46 Woodtec 5W wood-burning stove
48 Woodtec 5WD wood-burning stove
50 Woodtec 5XW wood-burning stove
52 Woodtec 5 Style wood-burning stove
54 Woodtec 5W Style wood-burning stove
56 Dimensions & Specifications
62 Technical data
66 Stove package dimensions
67 Stove packages

fireline™

## 7 YEAR WARRANTY

Get peace of mind with all Fireline wood-burning & multi-fuel stoves with 12-month parts and labour warranty, with the option of extending the parts warranty for a further six years if you fill in your warranty registration online within one month of purchasing your product. Full details and terms & conditions can be found on our website www.charltonandjenrick.co.uk

## Tertiary Air

Our patented tertiary air-profiling system delivers the clean combustion and high efficiency required to meet or exceed the 2022 Ecodesign Directive. Every Fireline model uses this patented tertiary air profiling technology within the burn chamber, creating sharply defined flames and complete combustion. The patented tertiary air inlet system allows for rapid lighting and clean burning with minimal emissions.

## Airwash

Powerful airwash that aids the clean burning of the stove to produce the High Definition (HD) flame picture. This unique air control system provides automatic air distribution from a simple single lever burning control to keep the glass clean and maintain the clear view of the flame picture.

This and all the other features on our Fireline stoves combine to help us achieve the clearSkies level 5 certification level, exceeding the minimum requirements set by the Ecodesign 2022 regulations.

Look out for QR Codes on product pages to see product videos

# Fireline Multi-fuel Stoves
# Key Features

- All models clearSkies Level 5 certified – ultra clean burning.
- All models DEFRA exempt as standard.
- 5mm and 10mm thick laser-profiled and seam-welded steel construction for strength and long life.
- Draught-controlled tertiary air system.
- Contoured touch air control on all freestanding models.
- Smoothly profiled metal handles on all freestanding models.
- High-quality cast iron doors.
- Cast ceramic liner boards (freestanding & inset models) which are extremely durable and self-cleaning.
- Rotary cast iron grates on all freestanding models.
- All models fitted with solid fuel burning kits as standard.
- All inset stoves are multi-fuel capable.
- Stainless-steel bar handle on inset models.
- Stainless-steel multi tool supplied with all stove models.
- Interchangeable top or rear flue outlet on freestanding models.
- Powerful effective airwash.
- Exceptionally large ceramic glass window.
- Stainless-steel ash pan and fixings.

### TTi Airwash System

Fireline's integral patented TTi airwash system is a self-regulating system that provides a clean burn, and reduced CO and particulate emissions, resulting in very high efficiency and exceptionally clean glass.

# Fireline **Stove Door Styles**

## Arched Door
FA Door Models

Classical elegance with arch framed window design

## Chunky Square Door
FP Door Models

Chunky design creates a distinctive profile with metal door handle

## Modern Door
FQ Door Models

The largest glass panel, perfect for modern interiors

## Tracery Door
FT Door Models

Traditional twist on a classic design, with gothic tracery arches

## Curved Door
FX Door Models

Elegant and stylish, perfect for every interior

# Fireline **Stove Installation Methods**

## Limestone Surround

The most luxurious installation option, for either inset or freestanding stoves

## Inglenook

Create a cosy interior design for snug spaces

## Freestanding

Perfect for open plan living environments, creating a central feature

# Maximising the Potential of Your Stove

## Refuelling Your Fire

Place the logs into the centre of the fire, away from the rear, sides, and glass. This helps keep the glass and liners clean and enhances the flame picture as the fire is centralised.

Use your stove gloves when operating the door handle, air controls of your stove, and placing logs into the fire. The gloves are designed to protect your hand for long enough to carefully place the log and avoid bumping the back and side bricks.

## The Right Type of Wood

The best fuel for stoves is hardwood logs with no more than 20% moisture content for the best burn.

Kiln dried or seasoned work equally as well, but they must be seasoned long enough to achieve low moisture levels.

## Why Dry Wood?

Dry wood produces less smoke and more heat, and so is much cleaner and better for the environment.

Having a too high-water percentage will increase pollution, produce a poor level of heat output and cause tar to form in your chimney.

## Negatives of Solid Fuel

- Potential to crystallise the glass
- Damaging the stove through corrosion
- Replacement spares will be required to be purchased more often
- Potential liner damage
- Shortens the life expectancy of the appliance.

## Fuels Not to Use

- House Coal
- Painted or Preserved Wood
- Wet Wood
- Pallet Wood
- Newspaper and Card

## Storing Your Firewood

You should store wood in a well vented, dry area that is away from the rain, this is because rain will eventually rot the wood.

You should always stack your firewood because this will help promote air circulation.

You must avoid storing firewood on a soil floor if outside, as the soil will rot the wood.

If you are cutting your own logs for firewood, store them in a dry area, and allow them to dry for at least 12 months, but for wood like oak this can be as long as 24 months.

## How Much Do I Need?

If you are going to use your stove on most evenings and at weekends from October to April, then 3 to 4 cubic meters per year is typical for most UK households.

## Maintaining Your stove

### Cleaning the Glass on Your Stove

Use a specialist stove glass cleaner or newspaper dipped in vinegar to clean your glass. Never use an abrasive cloth or substance to clean the glass.

### Having Your Chimney Swept

You should have your chimney swept on a regular basis during the months it is in use. Having your chimney swept on a regular basis can help reduce acid corrosion.

### Clean Your Stove Accessories

It's not all just about your stove. Your various stove accessories also take a bit of bashing during regular use. Make sure to clean them to keep them in good working order.

Scan the QR code to see more in our complete stove guide ▶

**FX4** curved door model

**FX4** curved door log store model

## Fireline FX4 multi-fuel stove

Superior, large-stove performance from a petite, narrow design means that this model combines the efficiency and economy of a small stove with the enhanced performance of a much larger model. Continuous research and development has created a clean-burning heat that results in a cleaner, greener environment. Fitting virtually any aperture, this attractive design is freestanding. The large curved door styling offers superb flame pictures whether you burn wood or other fuels. This stove is Ecodesign certified, DEFRA Exempt, and clearSkies Level 5 certified as standard for use in any location.

**FX4** curved door model shown in Beckford surround with all limestone chamber

**FX4** curved door model shown on log store in inglenook

**FX5** curved door model shown on log store in inglenook

**FX5** Curved door model shown
in Beckford limestone surround with all limestone chamber

**FX5** curved door model

**FX5** curved door log store model

## Fireline FX5 multi-fuel stove

Traditional or contemporary, this 5kW multi-fuel stove looks as harmonious in a farmhouse inglenook as it does in a newly built town house. The stove is freestanding, with a curved door and large flame picture. For people living in a smoke-controlled area, this Fireline stove is SIA Ecodesign certified, DEFRA Exempt, and clearSkies Level 5 certified.

**FQ5** modern door model shown on log store in inglenook

## Fireline FQ5 multi-fuel stove

A new addition to the Fireline 5kW line-up, the FQ5 features a more modern door style making it perfect for contemporary interior spaces. Performance and environmental credentials are guaranteed with our tertiary air and airwash features. The optional log store and brushed stainless steel door handle are available to help you tailor your stove to your tastes and your environment.

**FQ5** modern door model

**FQ5** modern door log store model

**FQ5** brushed stainless steel door handle model

**FQ5** modern door model shown in Aylesbury limestone surround with rustic brick chamber

SCAN THE QR CODE TO SEE THE FQ5 STOVE IN ACTION ON YOUTUBE

**FA5W** arched door model shown in Aylesbury limestone surround with all limestone chamber

## Fireline FA5W multi-fuel stove

The highly successful Fireline 5kW Wide stove line-up now includes a traditional clean arch-framed window design. Complementing the classic ellipse arch shape of the door is a distinctive, sculpted, oval primary air control feature. This stove has it all with an effortless classical appearance whilst benefitting from the state-of-the-art firebox combustion technology that helps to achieve the Ecodesign 2022 certification, DEFRA Exemption, and clearSkies Level 5 certification standards.

**FA5W** arched door model

**FA5W** arched door
log store model

## Fireline FP5W multi-fuel stove

Incorprating a modern chunky square door design which replaces the original FP square door style. Designed to complement the form of the stove to create a distinctive and purposeful profile, this can be further enhanced with the optional log store. A solidly built Ecodesign 2022 certified, DEFRA Exempt, clearSkies Level 5 certified stove which is highly thermally efficient for today's modern world.

**FP5W** chunky square door model shown free-standing on log store

**FP5W** chunky square door model

**FP5W** chunky square door log store model

SCAN THE QR CODE TO SEE THE FP5W STOVE IN ACTION ON YOUTUBE

**FQ5W** modern door model

**FQ5W** modern door log store model

**FQ5W** brushed stainless steel door handle model

## Fireline FQ5W multi-fuel stove

A mainstay of the Fireline line-up is the FQ 5kW Wide model with attractive designer styling. Featuring an even larger glass viewing panel than the original 5 Wide stablemates, the subtle curves and angles of the substantial cast iron door frame enhance the superb fire view within. An optional solid stainless-steel bar handle and log store stand are available for personalisation. Elegant balance blended with substantial presence mean that the FQ lends itself to creating a relaxed living space with a wide variety of fireplace and interior choices. All Fireline stoves are multi-fuel, Ecodesign 2022 certified, DEFRA Exempt, and clearSkies Level 5 certified  as standard.

**FQ5W** modern door model shown free-standing on log store

**FQ5W** modern door model shown
in Aylesbury limestone surround with grey slate liners

**FT5W** tracery door model

**FT5W** tracery door
log store model

## Fireline FT5W multi-fuel stove

The FT5W stove brings with it all the modern environmental benefits of a clearSkies Level 5 multi-fuel stove whilst providing a traditional exterior appearance thanks to the elegant cast iron door. Maintaining a superb view of the fire, the wide screen door features a classic ellipse main arch design plus three slim Gothic-style tracery arches. A solidly built 5kW multi-fuel stove that, like all stoves in this brochure, is Ecodesign 2022 certified, DEFRA Exempt, and clearSkies Level 5 certified and highly thermally efficient for today's modern world.

**FT5W** tracery door model shown in Balmoral limestone surround with grey slate liners

**FX5W** curved door model

**FX5W** curved door log store model

## Fireline FX5W multi-fuel stove

The FX5W gives the large looks of the 8kW wide screen stove while maintaining the nominal heat output at 5kW. This is achieved by a subtle reduction in depth of the grate area whilst the overall 480mm width of the stove is the same as the larger 8kW model. This means that full 375mm logs can be accommodated on the standard multi-fuel grate, which incorporates a rotary riddle mechanism using well-proven principles. Featuring a firebox lined with ceramic clean burn liners and Fireline's own patented firebox air supply technology, clean burning was assured from the beginning – Ecodesign 2022 certified, DEFRA Exemption, and clearSkies Level 5 certification were formalities. 81% efficiency ensures top levels of fuel economy and the highly effective, proven Fireline airwash system gives fabulous views of the fire through the large glass panel.

SCAN THE QR CODE TO SEE THE FX5W STOVE IN ACTION ON YOUTUBE

**FX5W** curved door model shown in Aylesbury limestone surround with grey slate liners

**FX5W** curved door model shown in inglenook on log store

**FA8** arched door model shown in inglenook

## Fireline FA8 multi-fuel stove

For those requiring a little more heat for their room, the FA8 is an 8kW nominal output multi-fuel stove. Effortlessly elegant, featuring a classic arch-styled heavy cast iron door and a sleek oval air control, this stove's proportions mean that it looks fabulous in an Inglenook, a large fireplace or freestanding on the log store. Peace of mind is guaranteed by Ecodesign 2022 certification, DEFRA Exemption, and clearSkies Level 5 certification as standard for the whole range.

**FA8** arched door model

**FA8** arched door
log store model

**FA8** arched door model shown in Aylesbury limestone surround with all limestone chamber

**FP8** chunky square door model

**FP8** chunky square door log store model

## Fireline FP8 multi-fuel stove

A large 8kW multi-fuel stove featuring a modern chunky square door design. Complementing the form of the stove to create a distinctive and purposeful profile, which can be further enhanced with the optional log store. The extra-wide flame picture will enhance even the biggest of rooms. All Fireline stoves are Ecodesign 2022 certified, DEFRA Exempt, and clearSkies Level 5 certified as standard.

**FP8** chunky square door model shown in Balmoral limestone surround with rustic brick liners

**FQ8** modern door model shown on log store

## Fireline FQ8 multi-fuel stove

One of the most popular 8kW models by Fireline is the FQ8 with modern cast iron door styling. Featuring an even larger glass viewing panel than the FX and FP originals, the subtle curves and angles of the substantial cast iron door frame enhance the superb fire view within. Elegant balance blended with substantial presence lends itself to a wide variety of fireplace and interior choices to create a relaxed living space. An optional brushed stainless steel door handle is available to replace the standard door handle or a log store can be added for extra practicality. All Fireline stoves are multi-fuel, Ecodesign 2022 certified, DEFRA Exempt, and clearSkies Level 5 certified as standard.

**FQ8** modern
door model

**FQ8** modern
door log store model

**FQ8** brushed stainless steel
door handle model

**FQ8** modern door model shown in
Balmoral limestone surround with rustic brick liners

**FT8** tracery door model shown in inglenook

## Fireline FT8 multi-fuel stove

A large 8kW multi-fuel stove featuring a classic cast iron arch door with slim Gothic tracery retaining a breathtaking view of the fire. Although undoubtedly a traditional-looking stove, the FT8 is a modern and efficient Ecodesign 2022 certified, DEFRA Exempt, and clearSkies Level 5 certified stove at heart. This stove's proportions and stunning clean burn flame picture mean that it looks great in an inglenook, in a large fireplace or freestanding on the log store.

**FT8** tracery door model

**FT8** tracery door
log store model

**FX8** curved door model

## **Fireline** FX8 multi-fuel stove

The FX8 stove is a big, heavyweight, freestanding design, made from steel with a traditional cast iron door with extra-wide ceramic glass flame viewing window. Ideally suited to larger rooms, this stove can pump out a really serious amount of heat. The stove has a curved door design, and an extra-wide flame picture will enhance even the biggest of rooms. Fireline stoves are Ecodesign 2022 certified, DEFRA Exempt, and clearSkies Level 5 certified as standard.

**FX8** curved door model

**FX8** curved door log store model

SCAN THE QR CODE TO SEE THE FX8 STOVE IN ACTION ON YOUTUBE

**FX8** curved door model shown in Berrington limestone surround with rustic brick liners

**FPi5** inset stove shown in Beckford limestone surround with black granite back panel, hearth and 3-sided wide trim

## Fireline FPi5 multi-fuel stove

Create a stunning impression in your living room and enjoy the pleasure of a real wood-burning stove. Today's stoves burn wood efficiently and cleanly, providing maximum heat and a focal point in any home. The 16" x 22" FPi5 has been designed to fit virtually any standard Class I chimney. This means fitting should be easy, with little building work required. This stove is Ecodesign 2022 certified, DEFRA Exempt, and clearSkies Level 5 certified plus being multi-fuel means you also have the option of burning solid fuel. When married with a Fireline limestone surround, such as the Beckford shown above, the effect can be truly stunning. The stove comes with a solid cast iron door for long lasting durability.

**FPi5** inset stove shown in Beckford all limestone surround and hearth with 3-sided trim

**FPi5W** inset stove shown in Aylesbury limestone surround with four-sided trim

## Fireline FPi5W multi-fuel stove

FPi5W is a mid-sized 5kW rectangular inset multi-fuel stove designed to fit 20" fireplace openings to neatly offer a mid-sized firebox unit retaining a 5kW nominal rating. The firebox technology is well adapted to this size thereby maintaining 78% efficiency, Ecodesign 2022 certification, DEFRA Exemption, and clearSkies Level 5 certification standards of clean combustion. The stove comes complete with a high-quality multi-fuel kit and stainless-steel ashpan, so no compromise on ash removal is necessary. It comes with a cast iron ceramic glazed door.

SiA
ecodesign
ready
clearSkies
clearskiesmark.org
5

## Fireline FPi8 multi-fuel stove

A classical yet contemporary design, the FPi8 features a truly stunning wide flame window that gives this model a superb room presence. The extra-large fire chamber accepts logs over ½ metre in length, which results in a longer burn and more efficient heating, not to mention the time saved in cutting small logs. The stove is available with a choice of a three or four-sided trim.

**FPi8** inset stove shown set into the wall with a four-sided trim

**FPi8** inset stove set into the wall with a four-sided trim

# Fireline Woodtec Stove Range

## Woodtec modern stoves

**Woodtec 5**

**Woodtec 5W**

**Woodtec 5WD**

**Woodtec 5XW**

## Woodtec modern stoves on stand accessory

**Woodtec 5** on stand

**Woodtec 5W** on stand

**Woodtec 5WD** on stand

**Woodtec 5XW** on stand

## Woodtec modern stoves on log store accessory

**Woodtec 5**
with log store

**Woodtec 5W**
with log store

**Woodtec 5WD**
with log store

**Woodtec 5XW**
with log store

## Woodtec modern stoves on low leg stand accessory

**Woodtec 5**
on low leg stand

**Woodtec 5W**
on low leg stand

**Woodtec 5WD**
on low leg stand

**Woodtec 5XW**
on low leg stand

## Woodtec Style Stoves

**Woodtec 5 Style**

**Woodtec 5W Style**

Unashamedly accentuating the delightful wood fire at its heart, these refined and elegant designs combine with powerful SIA Ecodesign certified and clearSkies certified performance to deliver Woodtec's unique and compelling allure.

Clean lines of the exquisitely profiled cast iron door and strong seam-welded steel firebox blend flawlessly into a multitude of fireplace and interior scenes. Cutting-edge patented biomass combustion technology is ingeniously integrated into a captivating paradigm of warm ambience created by fire.

Easy to operate with a technically advanced single air control and powerful airwash, each of the models, apart from the new Style models, can be personalised with optional stand, low leg stand, log store and black or oak handles. For total peace of mind, all models are SIA Ecodesign certified, DEFRA exempt for smoke control areas, clearSkies Level 5 certified, CE and UKCA marked to harmonised standards and manufactured under ISO 9001:2015 and ISO 14001:2015 systems.

Choose only the best with Woodtec stoves from Fireline.

## Key Features

- All models clearSkies Level 5 certified – ultra clean burning
- Extra high-quality, long-lasting, cast ceramic firebox liners.
- Super clean design lines.
- Powerful airwash system.
- Minimum 75mm rear clearance to combustibles.*
- Minimum 50mm clearance to non-combustibles.
- 80% plus efficiencies.
- Slimline fireboxes as standard < 12" deep.
- Top flue centre 77mm from back of stove.
- Top and rear flue outlet connections.
- Single stainless-steel air control lever.
- High-quality cast iron doors.
- External Air Kit supplying 100% air available.
- DEFRA exempt for burning wood in smokeless zones.
- Super wide fire beds.
- 12mm superimposed hearth compatible.
- 5" flue connections for convenience and flexibility.
- Adjustable feet for uneven hearths.
- Stainless-steel door lever.
- Cool touch stainless-steel handle.
- Optional black or oak handle.
- Solid stainless-steel operating tool provided.
- Patented tertiary air system.
- High-quality stove gloves provided.
- Stainless-steel ash rake provided.
- Unique optional ash solution available for instant firebox preparation.
- Standard, Wide, Wide Deep and Extra-Wide models, Style, and Style Wide models.

*Minimum rear clearances from combustibles achieved using twin wall flue pipe from the top of the stove plus heatshields provided. The 5XW is 100mm.

**Woodtec 5** stove shown on stand in Aylesbury limestone surround with rustic brick chamber

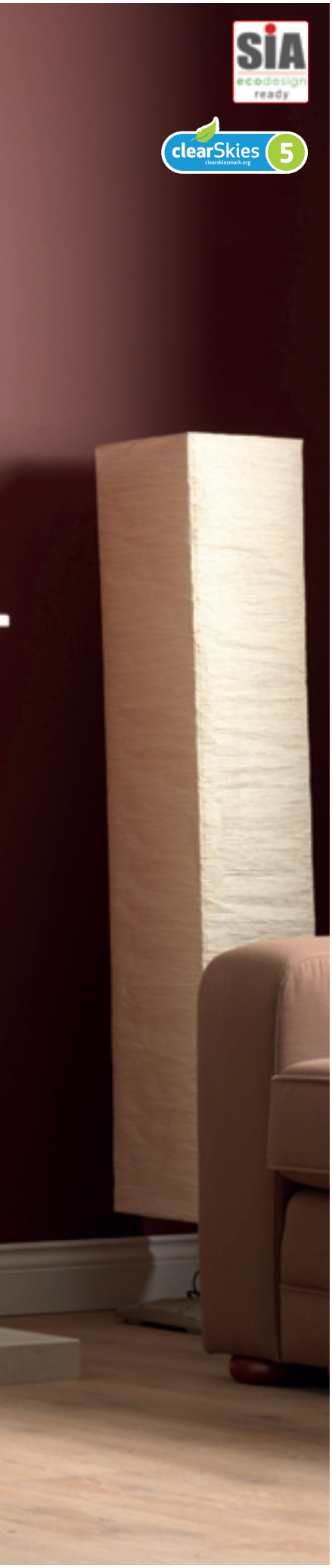

**Woodtec 5**

**Woodtec 5**
on stand

**Woodtec 5**
on low leg stand

**Woodtec 5**
on log store

## Woodtec 5 wood-burning stove

The Woodtec range from Fireline offers the clean lines of the exquisitely profiled cast iron door and strong seam-welded steel firebox and blends flawlessly into a multitude of fireplace and interior scenes. The stove features extra high-quality, long-lasting, cast ceramic firebox liners. Not only do the liners look great but they are self-cleaning; when you burn the stove and get the temperature up, any soot on the liners will fade away.

**Woodtec 5** stove shown on stand in an inglenook

**Woodtec 5W**

**Woodtec 5W**
on stand

**Woodtec 5W**
on low leg stand

**Woodtec 5W**
on log store

## **Woodtec** 5W Wide wood-burning stove

Like all the Woodtec stoves, the 5kW Wide is easy to operate with a technically advanced single air control and powerful airwash. Personalisation is possible with optional stand, low leg stand, log store and black or oak handles. As with the other stoves in the range, they have a 5" flue connection for convenience and flexibility.

**Woodtec 5W** stove shown on stand in Aylesbury limestone surround with rustic brick chamber

**Woodtec 5W** stove shown in Aylesbury limestone surround with grey slate chamber

**Woodtec 5WD**

**Woodtec 5WD**
on stand

**Woodtec 5WD**
on low leg stand

**Woodtec 5WD**
on log store

## **Woodtec** 5WD Wide Deep wood-burning stove

The deepest in the range, the Woodtec 5kW Wide Deep offers one of the largest viewing windows on the market for a 5kW stove. This model takes advantage of our patented tertiary air system coupled with its unique ceramic and steel hybrid baffle design to enhance the efficiency and clean burning capabilities of the stove. All the models in the Woodtec range (and in fact all the stoves in this brochure) are SIA Ecodesign 2022 certified, DEFRA exempt for smoke control areas, clearSkies Level 5 certified, CE and UKCA marked to harmonised standards and manufactured under ISO 9001:2015 and ISO 14001:2015 systems.

**Woodtec 5WD** stove shown in an inglenook with grey slate chamber

**Woodtec 5WD** stove shown on log store

**Woodtec 5XW**

**Woodtec 5XW**
on stand

**Woodtec 5XW**
on low leg stand

**Woodtec 5XW**
on log store

## **Woodtec** 5XW Extra Wide wood-burning stove

The widest in the range, the Woodtec 5kW Extra Wide offers one of the largest viewing windows on the market for a 5kW stove. All the models in the Woodtec range (and in fact all the stoves in this brochure) are SIA Ecodesign 2022 certified, DEFRA Exempt for smoke control areas, and clearSkies Level 5 certified, CE and UKCA marked to harmonised standards and manufactured under ISO 9001:2015 and ISO 14001:2015 systems.

**Woodtec 5XW** stove shown on stand

**Woodtec 5XW** stove shown on log store

Woodtec 5 Style

## **Woodtec** 5 Style wood-burning stove

A new addition to the Fireline Woodtec range, the Woodtec 5 Style features a classical yet contemporary design. This stove has it all with an effortless classical appearance, yet it benefits from state-of-the-art firebox combustion technology for clearSkies level 5, Ecodesign 2022 certified and DEFRA exempt heating as standard.

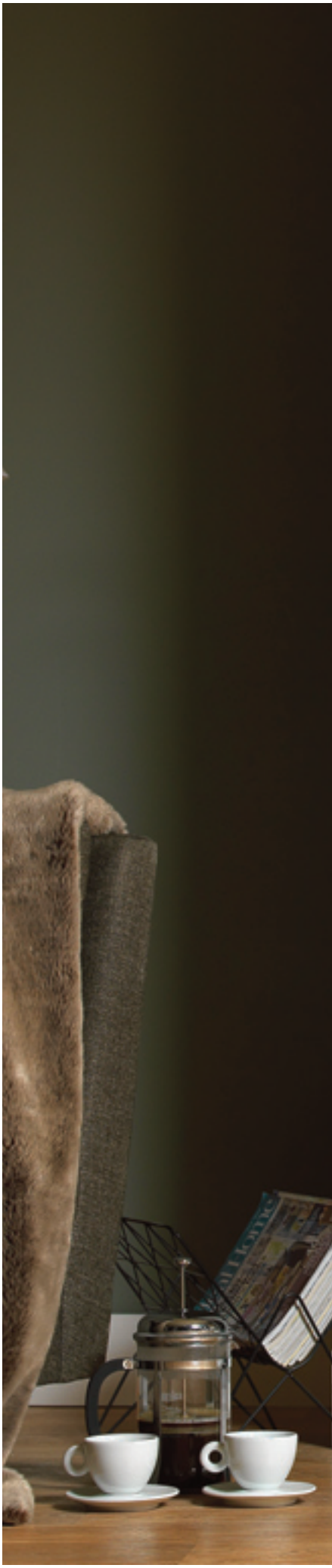

**Woodtec 5 Style** stove shown in an inglenook

**Woodtec 5W Style** stove shown in an inglenook

Woodtec 5W Style

## **Woodtec** 5W Style Wide wood-burning stove

A more traditional take on the Woodtec range, whilst still maintaining the modern design that makes this range stand apart from the rest. Low emission combustion systems make Fireline Woodtec stoves perfect for town or country living, easily achieving the clearSkies Level 5 certification. The Woodtec 5W Style wide is a luxurious addition to any room.

# Fireline 4kW and 5kW Stoves Dimensions

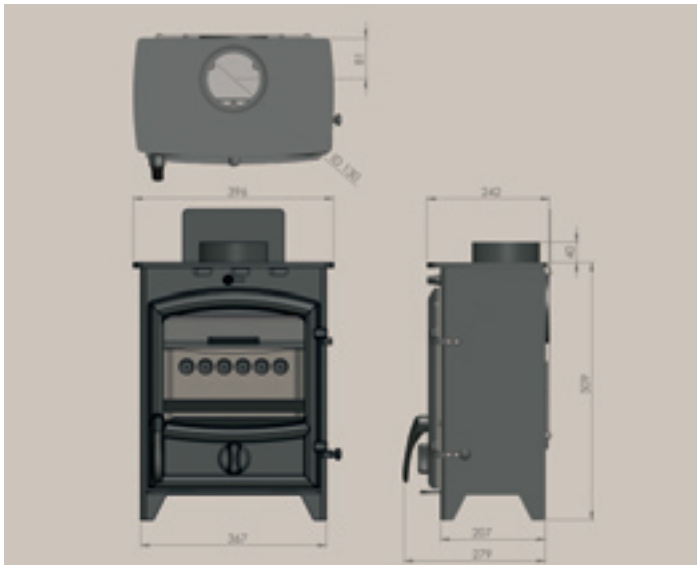

**FX4**

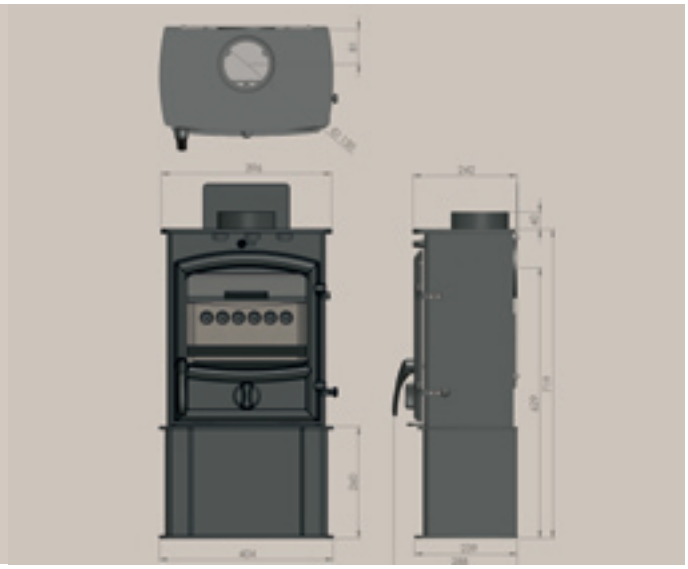

**FX4** on log store

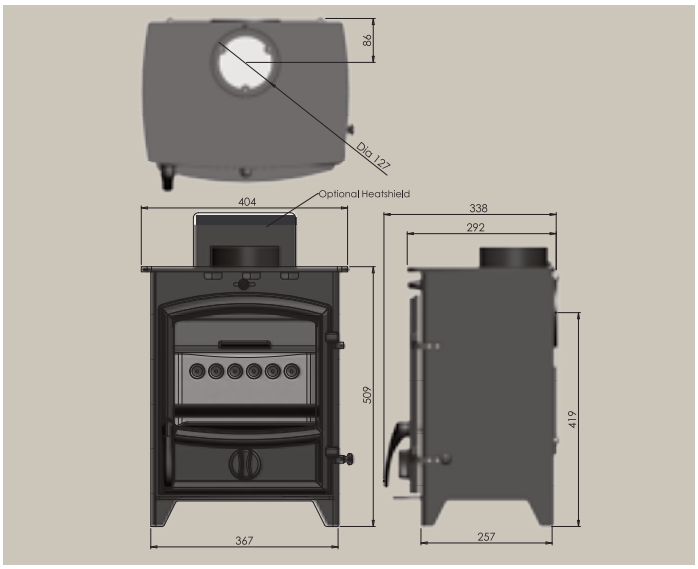


**FX5**

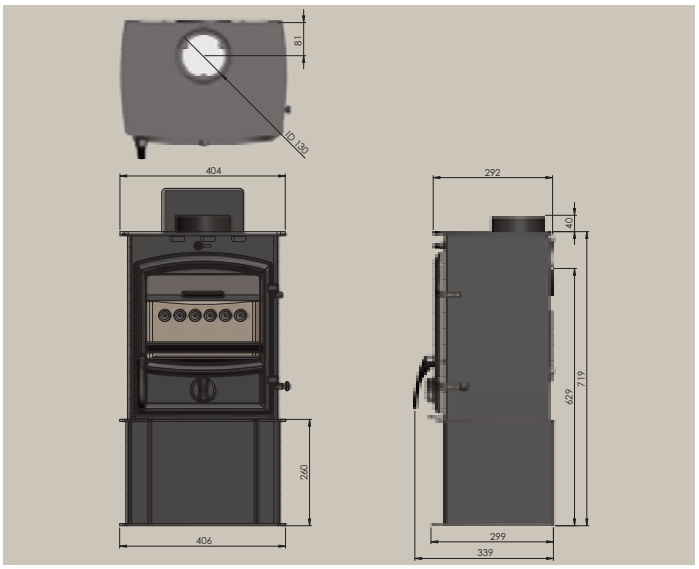


**FX5** on log store

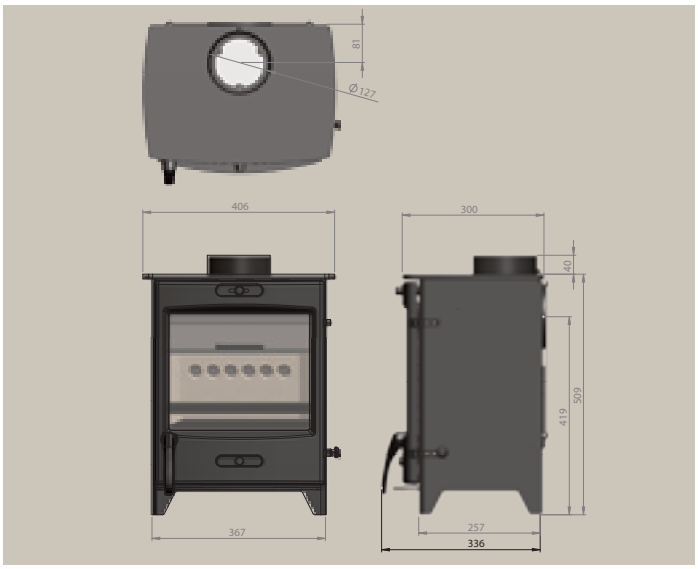


**FQ5**

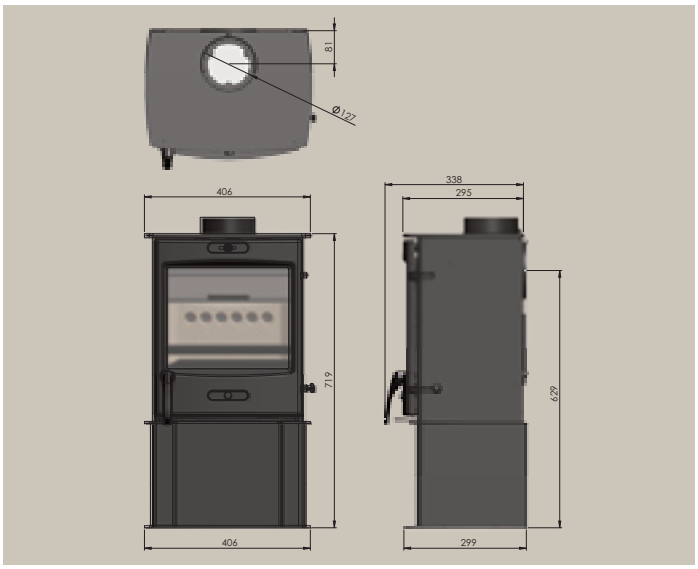


**FQ5** on log store

# Fireline 5kW Wide and 8kW Stoves Dimensions

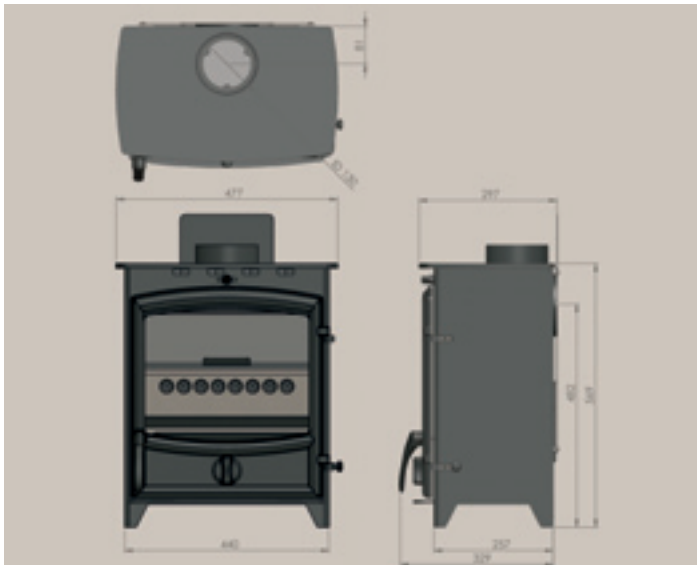

**FA5W/FX5W/FT5W/FP5W** (FX5W shown)

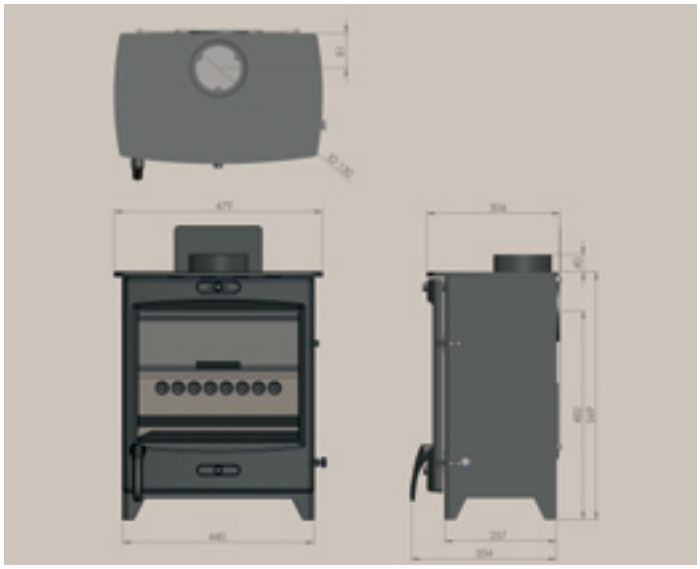

**FQ5W**

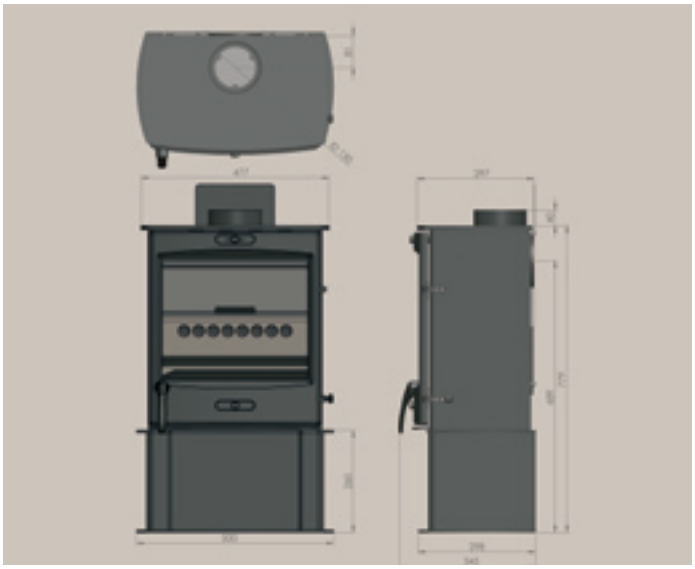

**FQ5W** on log store

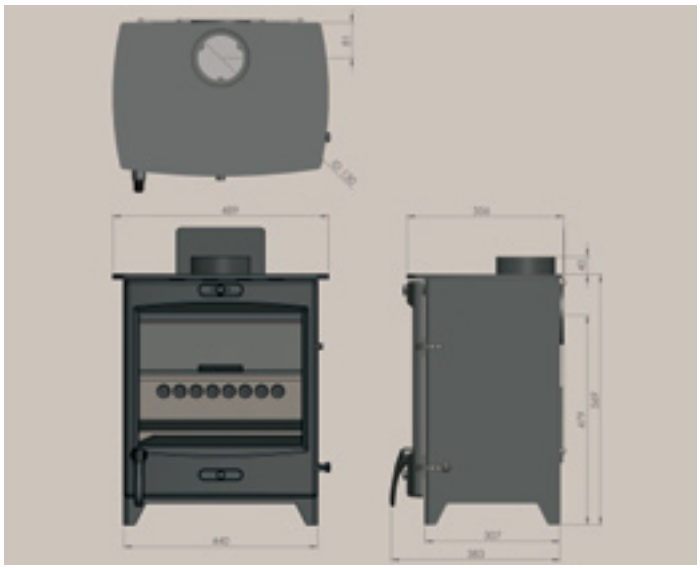

**FA8/FQ8/FX8/FT8/FP8** (FQ8 shown)

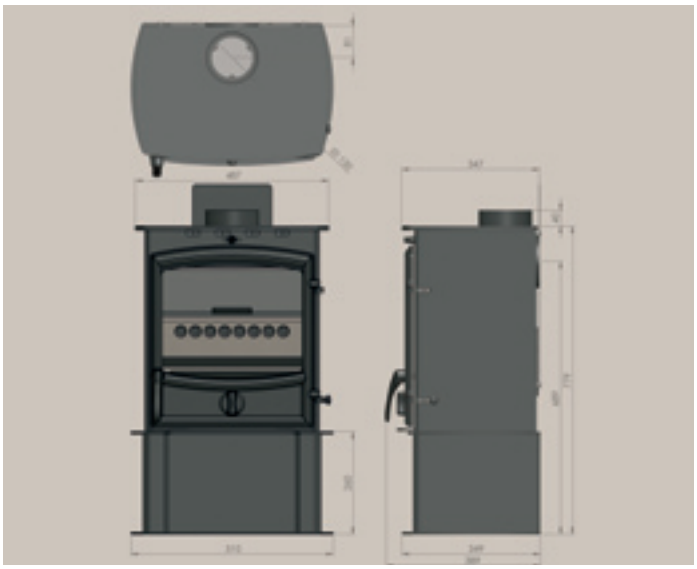

**FA8/FQ8/FX8/FT8/FP8** (FX8 shown) on log store

# Fireline Inset Stoves Dimensions

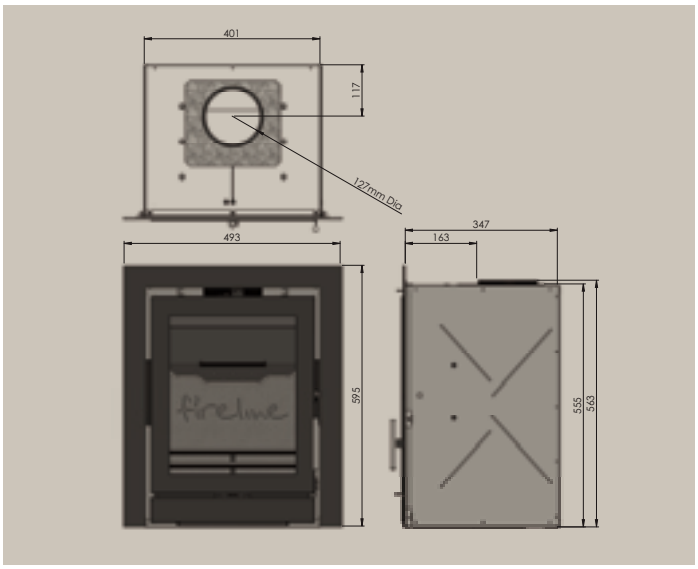


**FPi5** 3-sided*

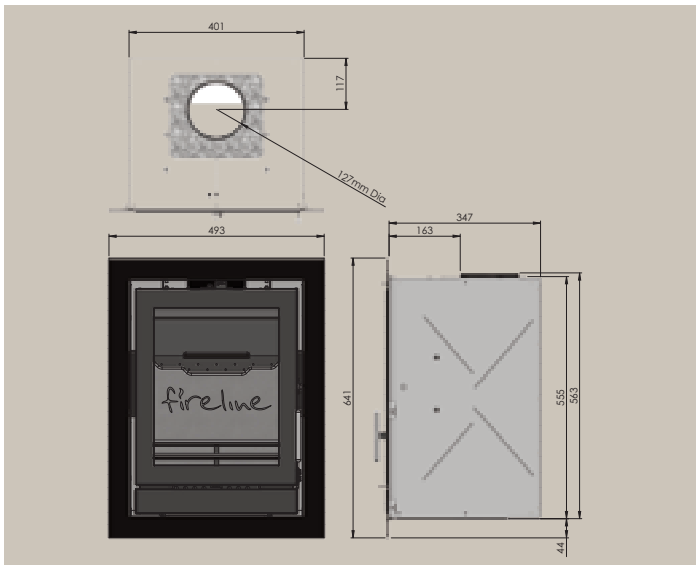


**FPi5** 4-sided*

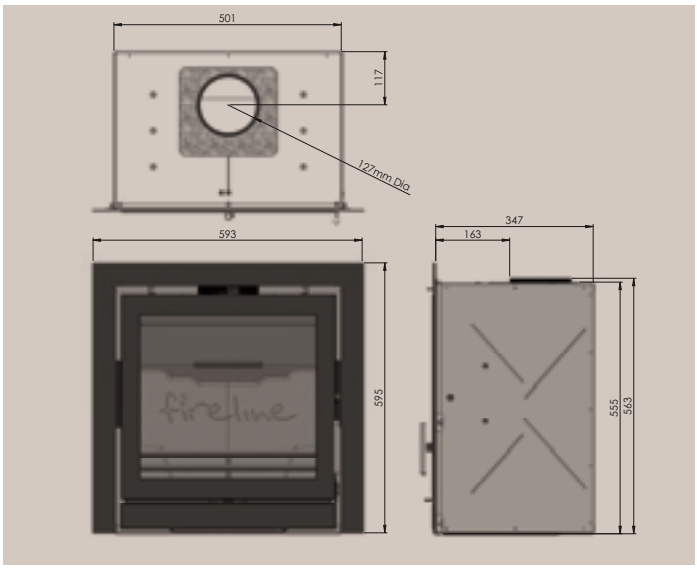


**FPi5W** 3-sided*

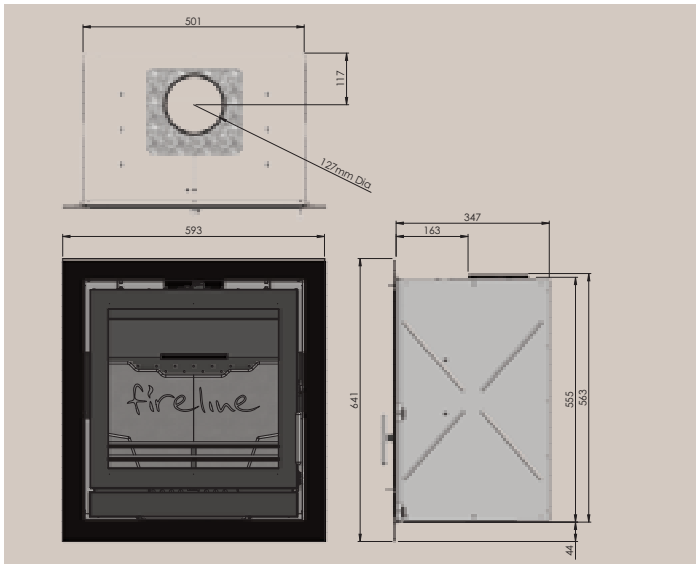


**FPi5W** 4-sided*

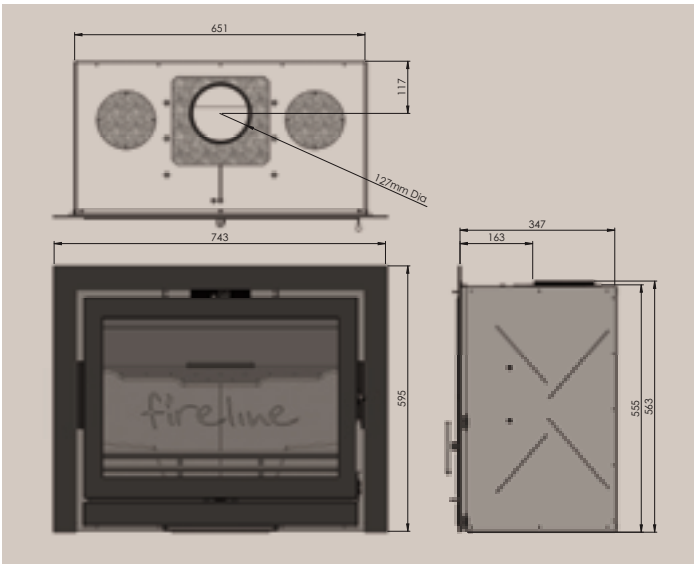


**FPi8** 3-sided*

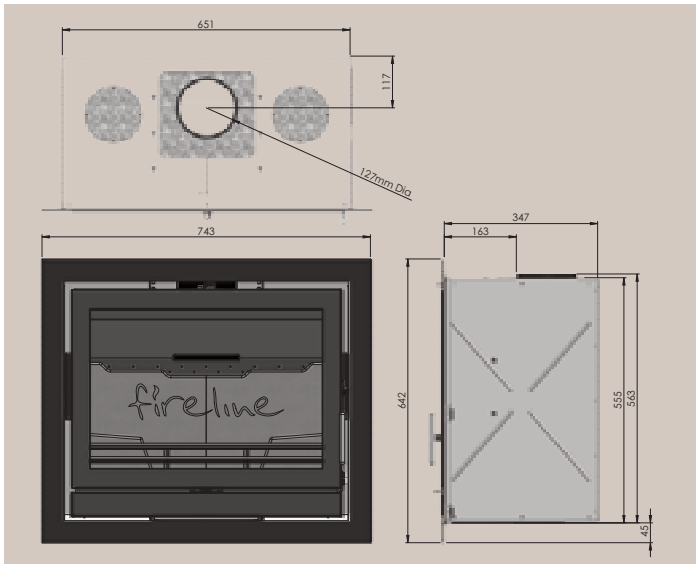


**FPi8** 4-sided*

*Optional three & four-sided trims are available in a wide format for the FPi5 and FPi5W models which adds 25mm to the frame border. The overall trim therefore increases by 50mm in width and height.

# Fireline Stoves Range Technical Data

| MODEL | FX4 | FX/ FQ5 | FX/FP/ FQ/FT/ FA 5W | FX/FP/ FQ/FT/ FA 8 | FPi5 | FPi5W | FPi8 | Woodtec 5/ 5 Style | Woodtec 5W/ 5W Style | Woodtec 5WD | Woodtec 5XW |
|---|---|---|---|---|---|---|---|---|---|---|---|
| Fuel: | Wood/ Solid Fuel | Wood/ Solid Fuel | Wood/ Solid Fuel | Wood/ Solid Fuel | Wood/ Solid Fuel | Wood/ Solid Fuel | Wood/ Solid Fuel | Wood | Wood | Wood | Wood |
| Flue: | Top/Rear | Top/Rear | Top/Rear | Top/Rear | Top (Inset) | Top (Inset) | Top (Inset) | Top/Rear | Top/Rear | Top/Rear | Top/Rear |
| Flue connector diameter: | 127mm (5") | 127mm (5") | 127mm (5") | 127mm (5") | 127mm (5") | 127mm (5") | 127mm (5") | 127mm (5") | 127mm (5") | 127mm (5") | 127mm (5") |
| Finish: | Matt Black | Matt Black | Matt Black | Matt Black | Matt Black | Matt Black | Matt Black | Matt Black | Matt Black | Matt Black | Matt Black |
| Gross Weight (kg): | 58 | 66 | 81 | 90 | 80 | 95 | 118 | 75 | 89 | 101 | 96 |
| Efficiency (%): | 81.8 | 81.7 | 80.8 | 81.1 | 81 | 78 | 78.4 | 81.1 | 80.2 | 80.5 | 81.2 |
| Declared Nominal Output (kW): | 4 | 5 | 5 | 8 | 5 | 5 | 8 | 5 | 5 | 5 | 5 |
| Output Range (DEFRA test): | 3.0-6.3 | 3.8-8.5 | 4.0-7.7 | 5.8-8.2 | 4.0-6.0 | 4.3-6.5 | 5.5-11.0 | 3.5-6.9 | 3.8-7.0 | 4.1-7.0 | 3.7-8.0 |
| Flue Gas Mass Flow (g/s): | 3.2 | 3.6 | 4.2 | 5.4 | 3.6 | 4.4 | 5.8 | 3.9 | 4.3 | 4.1 | 4.1 |
| Nominal Flue Temperature (°C): | 259 | 278 | 263 | 301 | 288 | 292 | 331 | 272 | 270 | 267 | 254 |
| Maximum Log Length (mm): | 300 | 300 | 375 | 375 | 300 | 395 | 540 | 300 | 400 | 400 | 450 |
| Energy Labelling EEI Class: | A+ | A+ | A+ | A+ | A+ | A | A | A+ | A+ | A+ | A+ |
| External Air Kit Option: | No | No | No | No | No | No | No | Yes | Yes | Yes | Yes |
| ClearSkies levels: | 5 | 5 | 5 | 5 | 5 | 5 | 5 | 5 | 5 | 5 | 5 |

| SMOKELESS FUEL TECHNICAL DATA | | | | | | | |
|---|---|---|---|---|---|---|---|
| MODEL | FX4 | FX/FQ5 | FX/FP/FQ/ FT/FA 5W | FX/FP/FQ/ FT/FA 8 | FPi5 | FPi5W | FPi8 |
| Test Fuel | Maxibrite | Maxibrite | Maxibrite | Maxibrite | Ancit | Ancit | Ancit |
| Efficiency (%) | 79.8 | 79.5 | 81.6 | 82.9 | 76.4 | 76.5 | 77 |
| Declared Nominal Output (kW) | 4 | 5 | 5 | 8 | 5 | 5 | 8 |
| Flue Gas Mass Flow (g/s) | 3.3 | 3.8 | 3.1 | 4.5 | 3.8 | 4.2 | 5.9 |
| Flue Temp (Nominal) | 270 | 294 | 298 | 311 | 275 | 253 | 297 |

# Fireline Woodtec Stove Dimensions & Specifications

For dimensions A, B, C & D please see table opposite.

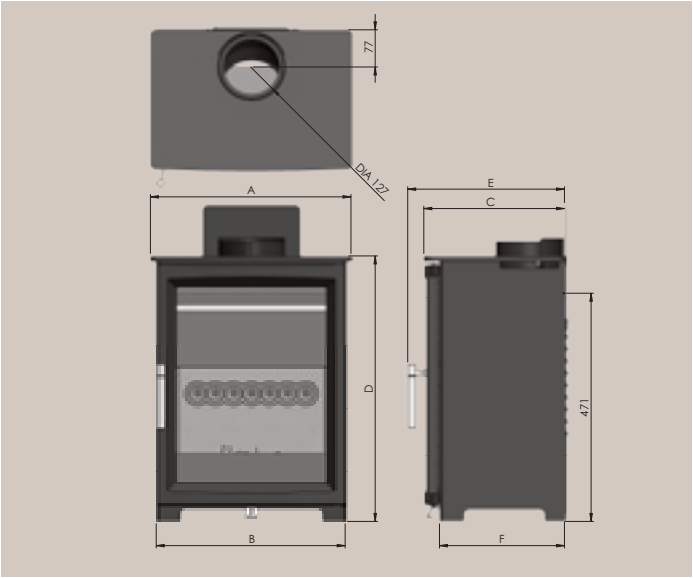


**Woodtec 5** stove

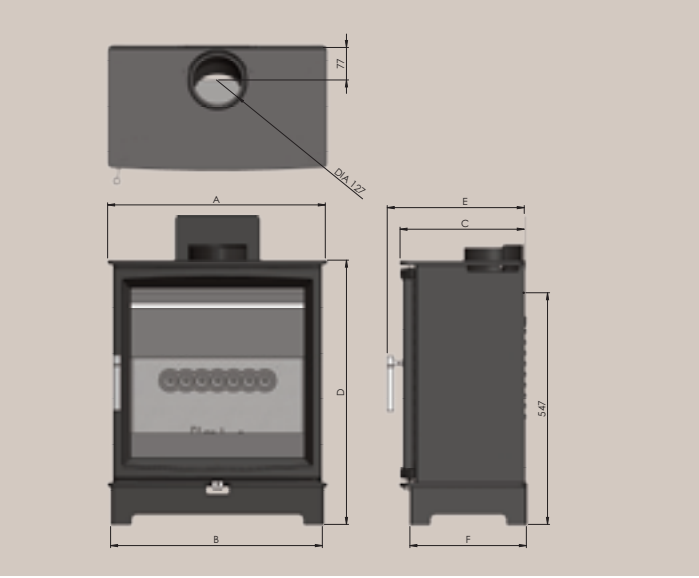


**Woodtec 5W** stove on stand

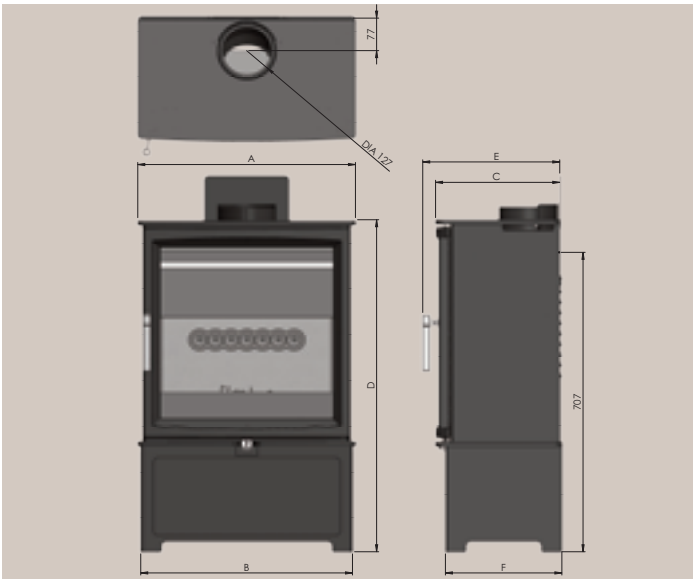


**Woodtec 5XW** stove on log store

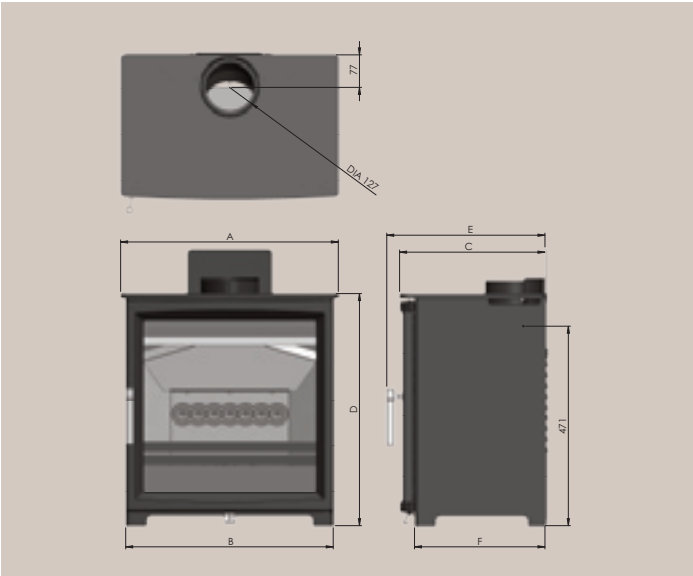


**Woodtec 5WD** stove

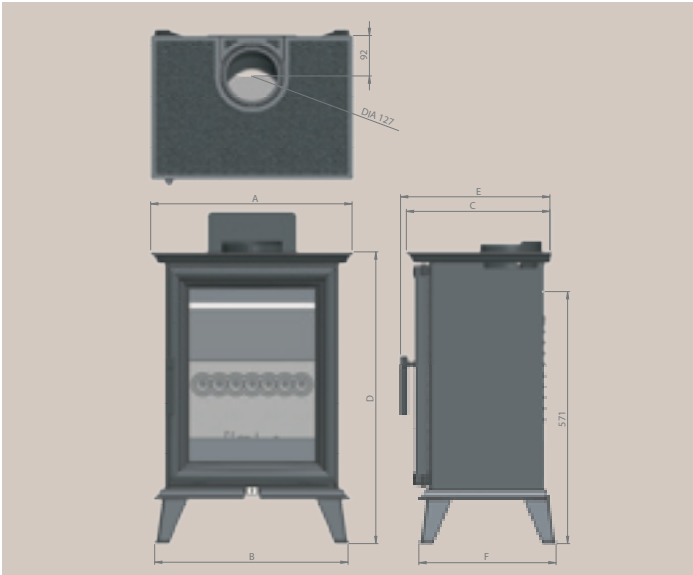


**Woodtec 5 Style**

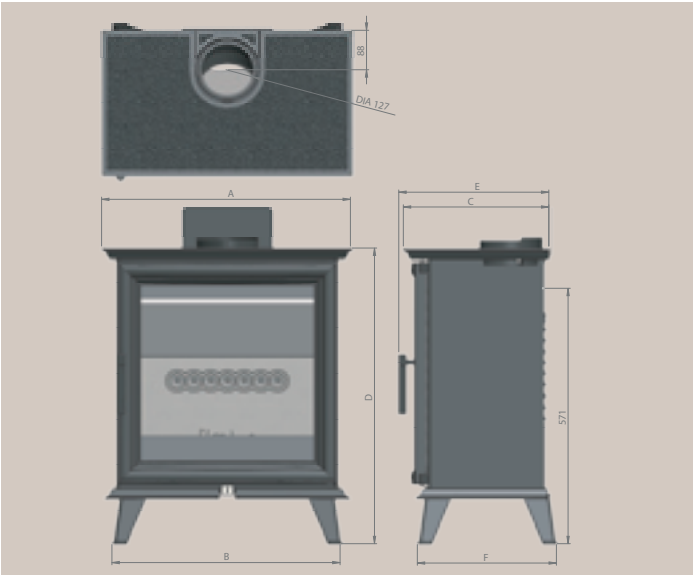


**Woodtec 5W Style**

| Dimensions (mm) | A | B | C | D | E | F |
|---|---|---|---|---|---|---|
| Woodtec 5 | 414 | 390 | 290 | 548 | 324 | 258 |
| Woodtec 5W | 514 | 490 | 293 | 548 | 324 | 258 |
| Woodtec 5WD | 514 | 490 | 343 | 548 | 374 | 308 |
| Woodtec 5XW | 564 | 540 | 295 | 548 | 324 | 258 |
| Woodtec 5 Style | 456 | 438 | 325 | 661 | 338 | 311 |
| Woodtec 5 Wide Style | 556 | 510 | 325 | 661 | 336 | 311 |
| Woodtec 5 on Stand | 414 | 400 | 290 | 624 | 324 | 275 |
| Woodtec 5W on Stand | 514 | 500 | 293 | 624 | 324 | 275 |
| Woodtec 5WD on Stand | 514 | 500 | 343 | 624 | 374 | 325 |
| Woodtec 5XW on Stand | 564 | 550 | 295 | 624 | 324 | 275 |
| Woodtec 5 on Logstore | 414 | 400 | 290 | 784 | 324 | 275 |
| Woodtec 5W on Logstore | 514 | 500 | 293 | 784 | 324 | 275 |
| Woodtec 5WD on Logstore | 514 | 500 | 343 | 784 | 374 | 325 |
| Woodtec 5XW on Logstore | 564 | 550 | 295 | 784 | 324 | 275 |

| Output Efficiency Ratings | Efficiency | EEI | Nominal Output | Typical Range | ClearSkies Level | DEFRA Exempt |
|---|---|---|---|---|---|---|
| Woodtec 5/5 Style | 81.1% | A+ | 5kW | 3.5-6.9kW | 5 | Yes |
| Woodtec 5W/5W Style | 80.2% | A+ | 5kW | 3.8-7.0kW | 5 | Yes |
| Woodtec 5WD | 80.5% | A+ | 5kW | 4.1-7.0kW | 5 | Yes |
| Woodtec 5XW | 81.2% | A+ | 5kW | 3.7-8.0kW | 5 | Yes |

# Fireline Stove Range
## Wood Burning
## – Technical Performance Details

Quality stoves are so much more than just a metal box at the bottom of the chimney. Considerable efforts are required to ensure that the stove can be thermally efficient and many further developments are required to make a stove fully clean burning. Stoves are often incorrectly considered 'clean burning' just because they have an airwash, but the hard truth is that even stoves with an airwash system and good thermal efficiency can be dirty burners. Fireline stoves are all both highly thermally efficient and genuinely clean burning with official SIA Ecodesign certification and DEFRA exemption listing easily achieved on all models. By choosing and using C&J stoves, you can be assured that all environmental considerations are taken good care of. Some of the following measures demonstrate just how well our stoves burn wood.

## Total Efficiency to EN13240/13229

Total efficiency is the overall effectiveness of the stove in converting the kW content of fuel into heat that you will feel in your room. This must be measured by an independent test house to BS EN 13240 or 13229 to be comparable with other stoves. Total efficiency is not a measure of clean burning in any way. It is quite possible to have a stove with high thermal efficiency that burns with plenty of smoke, or a clean burning stove with low efficiency. However Fireline has worked especially hard to bring you a range of stoves that are both highly efficient and very clean burning. All our Fireline stoves far exceed the minimum efficiency required by Ecodesign 2022 as the graph shows.

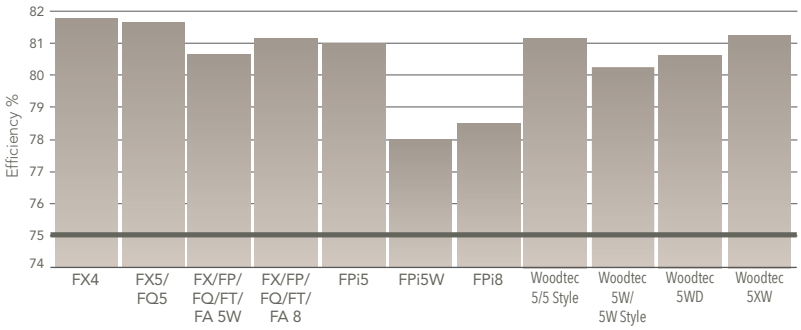


| | FX4 | FX5/FQ5 | FX/FP/FQ/ FT/FA 5W | FX/FP/FQ/ FT/FA 8 | FPi5 | FPi5W | FPi8 | Woodtec 5 /5 Style | Woodtec 5W/ 5W Style | Woodtec 5WD | Woodtec 5XW |
|---|---|---|---|---|---|---|---|---|---|---|---|
| Efficiency % | 81.8 | 81.7 | 80.8 | 81.1 | 81 | 78 | 78.4 | 81.1 | 80.2 | 80.5 | 81.2 |
| Ecodesign Minimum LIMIT | 75% | | | | | | | | | | |

## Carbon Monoxide (CO) Emissions

Historically the UK limit for CO emissions is 1% but this is a very high threshold in reality. Some other EU countries and Ecodesign 2022 specifies that the average shall not exceed 0.12% over the duration of 3 consecutive tests, a reduction of more than 88%. Bearing this in mind, C&J have worked tirelessly since 2013 to reduce CO emissions of all our stoves to within this 0.12% limit and this has been achieved with no stove producing more than 0.1% under accredited independent lab testing. In the adjacent graph you can see how our stoves exceed the Ecodesign 0.12% 2022 requirement already.

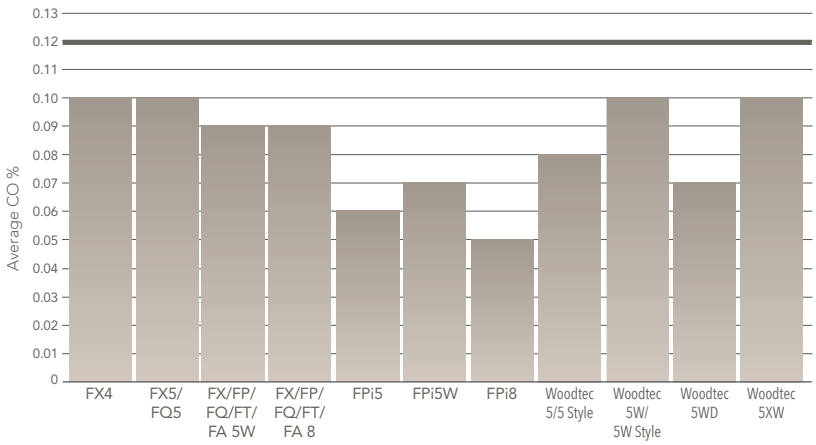


| | FX4 | FX5/FQ5 | FX/FP/FQ/ FT/FA 5W | FX/FP/FQ/ FT/FA 8 | FPi5 | FPi5W | FPi8 | Woodtec 5 /5 Style | Woodtec 5W/ 5W Style | Woodtec 5WD | Woodtec 5XW |
|---|---|---|---|---|---|---|---|---|---|---|---|
| Efficiency % | 0.1 | 0.1 | 0.09 | 0.09 | 0.06 | 0.07 | 0.05 | 0.08 | 0.1 | 0.07 | 0.1 |
| Ecodesign Maximum LIMIT | 0.12% | | | | | | | | | | |

## Organic Gaseous Carbon (OGC) Emissions

Organic Gaseous Carbon compounds are particles of unburned fuel and contribute to atmospheric pollution and associated human health concerns. OCG is to be governed at a maximum average of 200 mg/Nm³ during 3 consecutive lab tests. All current C&J stoves exceed this very important requirement for wood burning by an average of 57% and no less than 86% for mineral fuels as the graph shows.

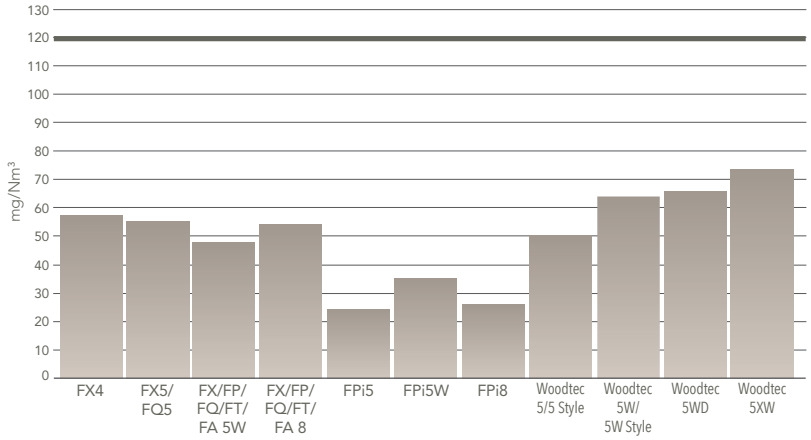


| | FX4 | FX5/FQ5 | FX/FP/FQ/ FT/FA 5W | FX/FP/FQ/ FT/FA 8 | FPi5 | FPi5W | FPi8 | Woodtec 5 /5 Style | Woodtec 5W/ 5W Style | Woodtec 5WD | Woodtec 5XW |
|---|---|---|---|---|---|---|---|---|---|---|---|
| OGC Emissions mg/Nm³ | 58 | 55 | 48 | 54 | 24 | 35 | 27 | 50 | 63 | 65 | 73 |
| Ecodesign Maximum LIMIT | 120 mg/Nm³ | | | | | | | | | | |

## Particulate Matter (PM) Emissions

Measured by the EU leading DIN+ filter method, Particulate Matter includes microscopic soot, ash dust and fuel particles that can be carried out of the flue into the environment. Only regulated in UK DEFRA smoke control areas until (which all Fireline stoves comply with of course), 2022 rules will impose a limit of 40 mg/Nm³ that must not be exceeded during 3 consecutive lab tests. DEFRA testing extends PM testing to low rate burning using UK test methods and although the limits are higher than Ecodesign, the combined result of both PM regulations is a very clean burning stove indeed.

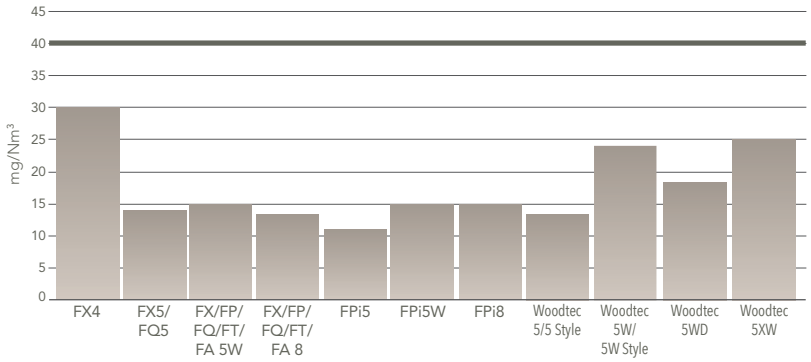


| | FX4 | FX5/FQ5 | FX/FP/FQ/ FT/FA 5W | FX/FP/FQ/ FT/FA 8 | FPi5 | FPi5W | FPi8 | Woodtec 5 /5 Style | Woodtec 5W/ 5W Style | Woodtec 5WD | Woodtec 5XW |
|---|---|---|---|---|---|---|---|---|---|---|---|
| PM Emissions mg/Nm³ | 30 | 14 | 15 | 13 | 11 | 15 | 15 | 13 | 24 | 18 | 25 |
| Ecodesign Maximum LIMIT | 40 mg/Nm³ | | | | | | | | | | |

## NOx Emissions

Emissions of nitric oxide and nitrogen dioxide, known collectively as NOx, are monitored in the environment as part of worldwide air quality standards. Unregulated in the UK until 2022, Ecodesign imposes a 200 mg/Nm³ limit on all solid fuel burners as the average of 3 consecutive tests in an accredited laboratory. All C&J stoves exceed the performance requirements for NOx emissions convincingly as the graph demonstrates.

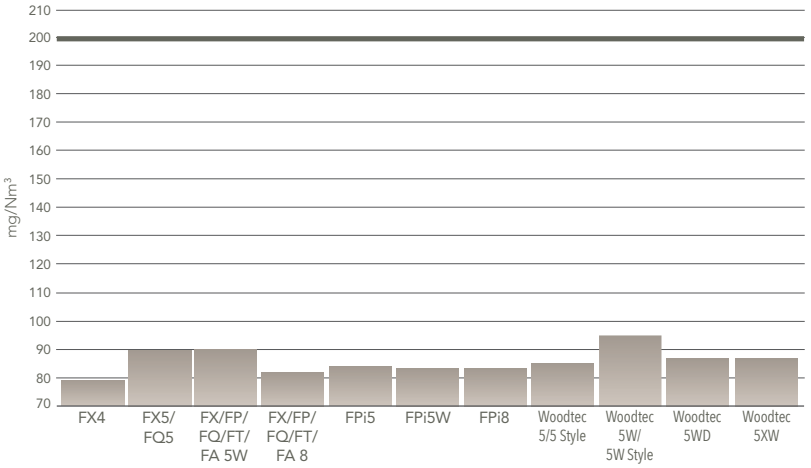


| | FX4 | FX5/FQ5 | FX/FP/FQ/ FT/FA 5W | FX/FP/FQ/ FT/FA 8 | FPi5 | FPi5W | FPi8 | Woodtec 5 /5 Style | Woodtec 5W /5W Style | Woodtec 5WD | Woodtec 5XW |
|---|---|---|---|---|---|---|---|---|---|---|---|
| Nox Emissions mg/Nm³ | 79 | 90 | 90 | 82 | 84 | 83 | 83 | 86 | 94 | 87 | 87 |
| Ecodesign Maximum LIMIT | 200 mg/Nm³ | | | | | | | | | | |

# Fireline Stove Range
# Mineral Fuel Burning
## – Technical Performance Details

Quality stoves are so much more than just a metal box at the bottom of the chimney. Considerable efforts are required to ensure that the stove can be thermally efficient and many further developments are required to make a stove fully clean burning. Stoves are often incorrectly considered 'clean burning' just because they have an airwash, but the hard truth is that even stoves with an airwash system and good thermal efficiency can be dirty burners. Fireline stoves are all both highly thermally efficient and genuinely clean burning with official SIA Ecodesign certification and DEFRA exemption listing easily achieved on all models. By choosing and using C&J stoves you can be assured that all environmental considerations are taken good care of. When using mineral fuels, it is essential to use a DEFRA Approved fuel from a totally reputable source. Ecodesign 2022 rules apply to mineral fuels in the same way as wood logs and so as you would expect, C&J have tested and approved all their stoves to the future standards already. Some of the following measures demonstrate just how well our stoves burn mineral fuels.

## Total Efficiency to EN13240/13229

Total efficiency is the overall effectiveness of the stove in converting the kW content of fuel into heat that you will feel in your room. This must be measured by an independent test house to BS EN 13240 or 13229 to be comparable with other stoves. Total efficiency is not a measure of clean burning in any way. It is quite possible to have a stove with high thermal efficiency that burns with plenty of smoke, or a clean burning stove with low efficiency. However Fireline has worked especially hard to bring you a range of stoves that are both highly efficient and very clean burning. All our Fireline stoves far exceed the minimum efficiency required by Ecodesign 2022 as the graph shows.

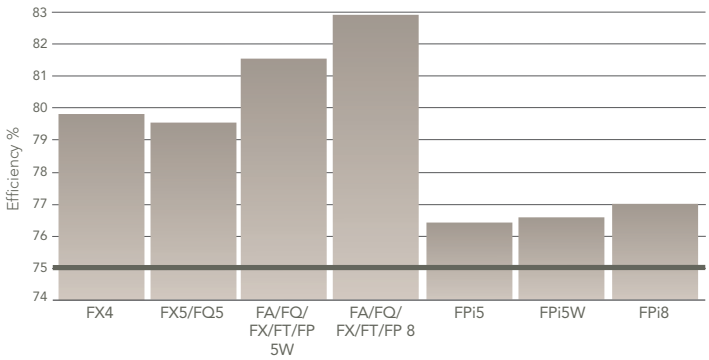


| | FX4 | FX5/FQ5 | FA/FQ/ FX/FT/FP 5W | FA/FQ/ FX/FT/FP 8 | FPi5 | FPi5W | FPi8 |
|---|---|---|---|---|---|---|---|
| Efficiency % | 79.8 | 79.5 | 81.6 | 82.9 | 76.4 | 76.5 | 77 |
| Ecodesign Minimum LIMIT | 75% | | | | | | |

## Carbon Monoxide (CO) Emissions

Historically the UK limit for CO emissions is 1% but in reality this is a very high threshold. Some other EU countries and Ecodesign 2022 specifies that the average shall not exceed 0.12% over the duration of 3 consecutive tests, a reduction of more than 88%. Bearing this in mind, C&J have worked tirelessly since 2013 to reduce CO emissions of all our stoves to within this 0.12% limit and this has been achieved with no stove producing more than 0.1% under accredited independent lab testing. In the adjacent graph you can see how well our stoves exceed the Ecodesign 2022 requirement already.

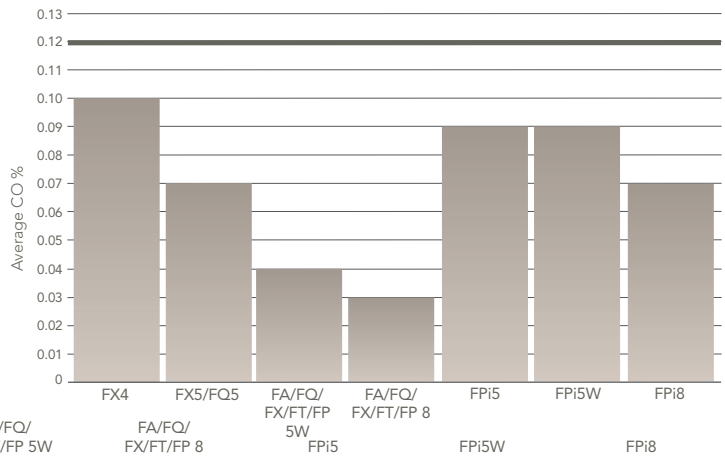


| | FX4 | FX5/FQ5 | FA/FQ/ FX/FT/FP 5W | FA/FQ/ FX/FT/FP 8 | FPi5 | FPi5W | FPi8 |
|---|---|---|---|---|---|---|---|
| Average CO % | 0.1 | 0.07 | 0.04 | 0.03 | 0.09 | 0.09 | 0.07 |
| Ecodesign Maximum LIMIT | 0.12% | | | | | | |

## Organic Gaseous Carbon (OGC) Emissions

Organic Gaseous Carbon compounds are particles of unburned fuel and contribute to atmospheric pollution and associated human health concerns. OCG is to be governed at a maximum average of 200 mg/Nm³ during 3 consecutive lab tests. All current C&J stoves exceed this very important requirement for solid fuel burning by an average of no less than 86% for as the graph shows.

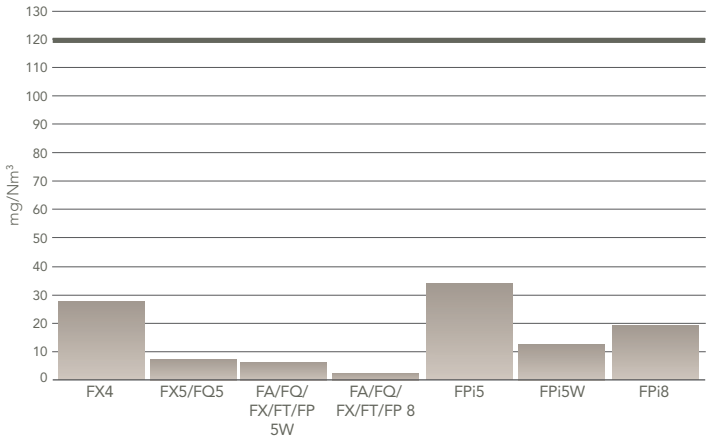


| | FX4 | FX5/FQ5 | FA/FQ/ FX/FT/FP 5W | FA/FQ/ FX/FT/FP 8 | FPi5 | FPi5W | FPi8 |
|---|---|---|---|---|---|---|---|
| OGC Emissions mg/Nm³ | 28 | 7 | 6 | 3 | 33 | 12 | 19 |
| Ecodesign Maximum LIMIT | 120 mg/Nm³ | | | | | | |

## Particulate Matter (PM) Emissions

Measured by the EU leading DIN+ filter method, Particulate Matter includes microscopic soot, ash dust and fuel particles that can be carried out of the flue into the environment. Only regulated in UK DEFRA smoke control areas until (which all Fireline stoves comply with of course), 2022 rules will impose a limit of 40 mg/Nm³ that must not be exceeded during 3 consecutive lab tests. DEFRA testing extends PM testing to low rate burning using UK test methods and although the limits are higher than Ecodesign, the combined result of both PM regulations is a very clean burning stove indeed.

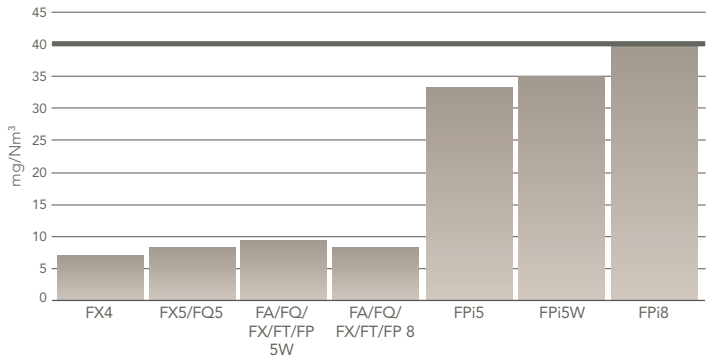


| | FX4 | FX5/FQ5 | FA/FQ/ FX/FT/FP 5W | FA/FQ/ FX/FT/FP 8 | FPi5 | FPi5W | FPi8 |
|---|---|---|---|---|---|---|---|
| PM Emissions mg/Nm³ | 7 | 8 | 9 | 8 | 33 | 35 | 40 |
| Ecodesign Maximum LIMIT | 40 mg/Nm³ | | | | | | |

## NOx Emissions

Emissions of nitric oxide and nitrogen dioxide, known collectively as NOx, are monitored in the environment as part of worldwide air quality standards. Presently unregulated in the UK until 2022, Ecodesign imposes a 200 mg/Nm³ limit on all solid fuel burners as the average of 3 consecutive tests in an accredited laboratory. All C&J stoves exceed the performance requirements for NOx emissions convincingly as the graph demonstrates.

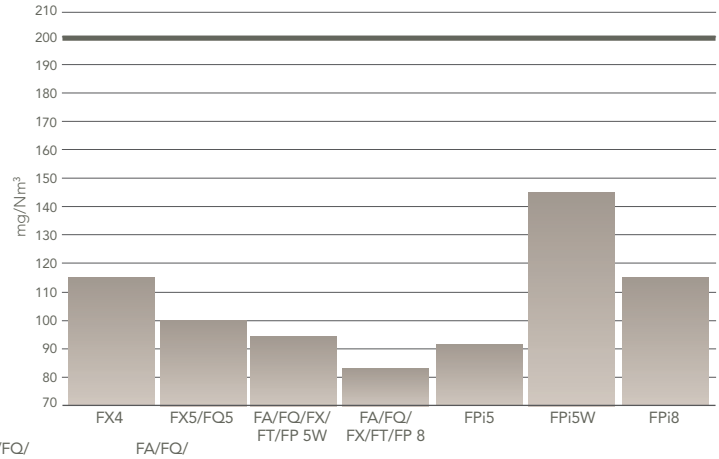


| | FX4 | FX5/FQ5 | FA/FQ/ FX/FT/FP 5W | FA/FQ/ FX/FT/FP 8 | FPi5 | FPi5W | FPi8 |
|---|---|---|---|---|---|---|---|
| Nox Emissions mg/Nm³ | 115 | 100 | 93 | 83 | 91 | 144 | 115 |
| Ecodesign Maximum LIMIT | 200 mg/Nm³ | | | | | | |

# Stove Packages

Throughout this brochure you will see wonderful examples of stoves in packages with fireplaces. Below are details of the stove packages that are shown in this brochure.

More are available; please speak to your authorised Fireline dealer for details. To find your nearest Fireline showroom use the store locator on our website.

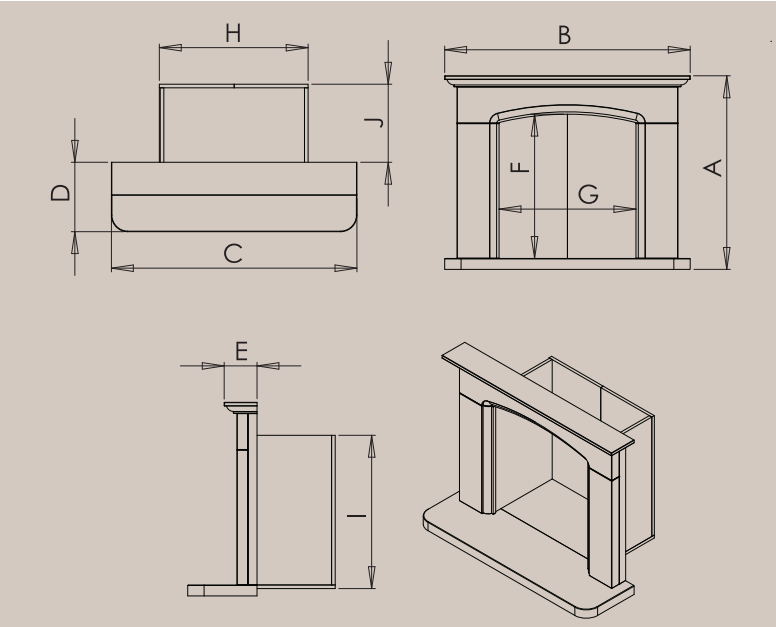


| STOVE PACKAGES | | | | | | | | | | |
|---|---|---|---|---|---|---|---|---|---|---|
| *All measurements displayed in mm* | A | B | C | D | E | F | G | H | I | J |
| Aylesbury FQ5W Grey Slate Chamber Freestanding Stove Package | 1,160 | 1,370 | 1,370 | 410 | 220 | 837 | 810 | 900 | 850 | 362 |
| Aylesbury FQ5W Rustic Brick- Chamber Freestanding Stove Package | 1,160 | 1,370 | 1,370 | 410 | 220 | 837 | 810 | 900 | 850 | 362 |
| Aylesbury FQ5W Limestone Chamber Freestanding Stove Package | 1,160 | 1,370 | 1,370 | 410 | 220 | 837 | 810 | 900 | 850 | 362 |
| Berrington FQ5W Limestone Chamber Freestanding Stove Package | 1,215 | 1,370 | 1,370 | 380 | 195 | 835 | 750 | 800 | 880 | 460 |
| Aylesbury FX5W Grey Slate Chamber Freestanding Stove Package | 1,160 | 1,370 | 1,370 | 410 | 220 | 837 | 810 | 900 | 850 | 362 |
| Aylesbury FX5W Rustic Brick Chamber Freestanding Stove Package | 1,160 | 1,370 | 1,370 | 410 | 220 | 837 | 810 | 900 | 850 | 362 |
| Aylesbury FX5W Limestone Chamber Freestanding Stove Package | 1,160 | 1,370 | 1,370 | 410 | 220 | 837 | 810 | 900 | 850 | 362 |
| Berrington FX5W Limestone Chamber Freestanding Stove Package | 1,215 | 1,370 | 1,370 | 380 | 195 | 835 | 750 | 800 | 880 | 460 |
| Berrington FP5W Limestone Chamber Freestanding Stove Package | 1,215 | 1,370 | 1,370 | 380 | 195 | 835 | 750 | 800 | 880 | 460 |
| Aylesbury FX8 Limestone Chamber Freestanding Stove Package | 1,160 | 1,370 | 1,370 | 410 | 220 | 837 | 810 | 900 | 850 | 362 |
| Balmoral FQ8 Grey Slate Chamber Freestanding Stove Package | 1,110 | 1,320 | 1,320 | 378 | 215 | 830 | 900 | 955 | 935 | 378 |
| Balmoral FQ8 Rustic Brick Chamber Freestanding Stove Package | 1,110 | 1,320 | 1,320 | 378 | 215 | 830 | 900 | 955 | 935 | 378 |
| Beckford FPi5 Black Granite Back Panel and Hearth Inset Stove Package with four sided trim | 1,060 | 1,220 | 1,220 | 410 | 150 | 760 | 760 | n/a | n/a | n/a |
| Aylesbury FPi5W All Limestone with three sided trim Inset Stove Package | 1,160 | 1,370 | 1,370 | 410 | 220 | 837 | 810 | n/a | n/a | n/a |
| Beckford FPi5W All Limestone with three sided trim Inset Stove Package | 1,060 | 1,220 | 1,220 | 410 | 150 | 760 | 760 | n/a | n/a | n/a |

**Aylesbury FPi5W** inset stove package

**Beckford FPi5** inset stove package

**Aylesbury FQ5W** freestanding stove package

**Balmoral FQ8** freestanding stove package

# Charlton & Jenrick Company and Product Accreditations

Charlton & Jenrick have made a very substantial investment over the years in obtaining a wide range of accreditations and trade body memberships to ensure that we are consistently offering the best possible products and services to our customers. We not only manufacture appliances but we also put in huge behind-the-scenes efforts to ensure that we input to and keep abreast of impending legislation, standards, product performance and environmental requirements. Currently we subscribe and contribute to the following accreditations:

***The UKCA (UK Conformity Assessed) mark*** is the new UK product mark that replaces the CE mark for products being placed on the market in Great Britain (England, Wales and Scotland). It covers most products that previously required the CE mark. All our fires comply to this new mark.

***SIA Ecodesign Ready*** marking is an independent scheme run by the Stove Industry Alliance to verify and independently demonstrate that wood burning stoves already meet the strict requirements of the 2022 EU Ecodesign Directive for performance and emissions.

***HHIC, the Heating and Hot Water Information Council*** is a trade body representing the UK gas fire industry. As part of the Energy and Utilities Alliance, within the HHIC we have an input into EU and UK standards committees, communicate with Government departments and keep abreast of serious issues affecting the gas fire industry.

***SIA, the Stove Industry Alliance*** is the UK trade body for the solid fuel stove industry. C&J are members of the Executive Committee and currently chair the Technical Committee enabling input into UK and EU standards committees and lines of communication into Government departments and keeping up to date on a wide range of issues affecting the industry.

@cJfires

www.facebook.com/cJfires

www.charltonandjenrick.co.uk

***DEFRA exemption*** is the mechanism where our wood burning stoves are checked and certified to comply with the Clean Air Act and therefore allowed to be used in smoke control zones throughout the UK. Involving a strict test programme and independent report, this is then thoroughly assessed by DEFRA advisors before being accepted.

***Gas Safe Register*** is the mandatory national competent persons scheme to allow work on gas fittings and appliances in customers' homes. Our service and most of the sales team have completed the regular training courses and sit the regular exams to ensure our customers have the best support and service.

***ISO 9001*** is the internationally recognised standard for Quality Management Systems which in our case includes the activity of product design and development as well as production, sale and support functions. Annual independent audits and certification ensure continued compliance in producing consistent quality products.

***ISO 14001*** is the internationally recognised standard for Environmental Management Systems. Once again this independently audited and certified system makes sure that we are regularly monitoring and reviewing the impact of the business and its products to ensure we minimise negative impacts and promote best practice.

***ClearSkies*** is a certification mark for Emissions and Energy Performance of domestic wood & solid fuel stoves and fireplaces. ClearSkies ratings, namely the certification levels, will show appliances that meet defined emissions and efficiency thresholds that exceed the minimum requirements set by the ecodesign regulation.

***CE marking*** of products is mandatory for electric fires and stoves in Europe. We always invest in independent testing and certification to ensure our products meet all necessary requirements for the regions we operate in.

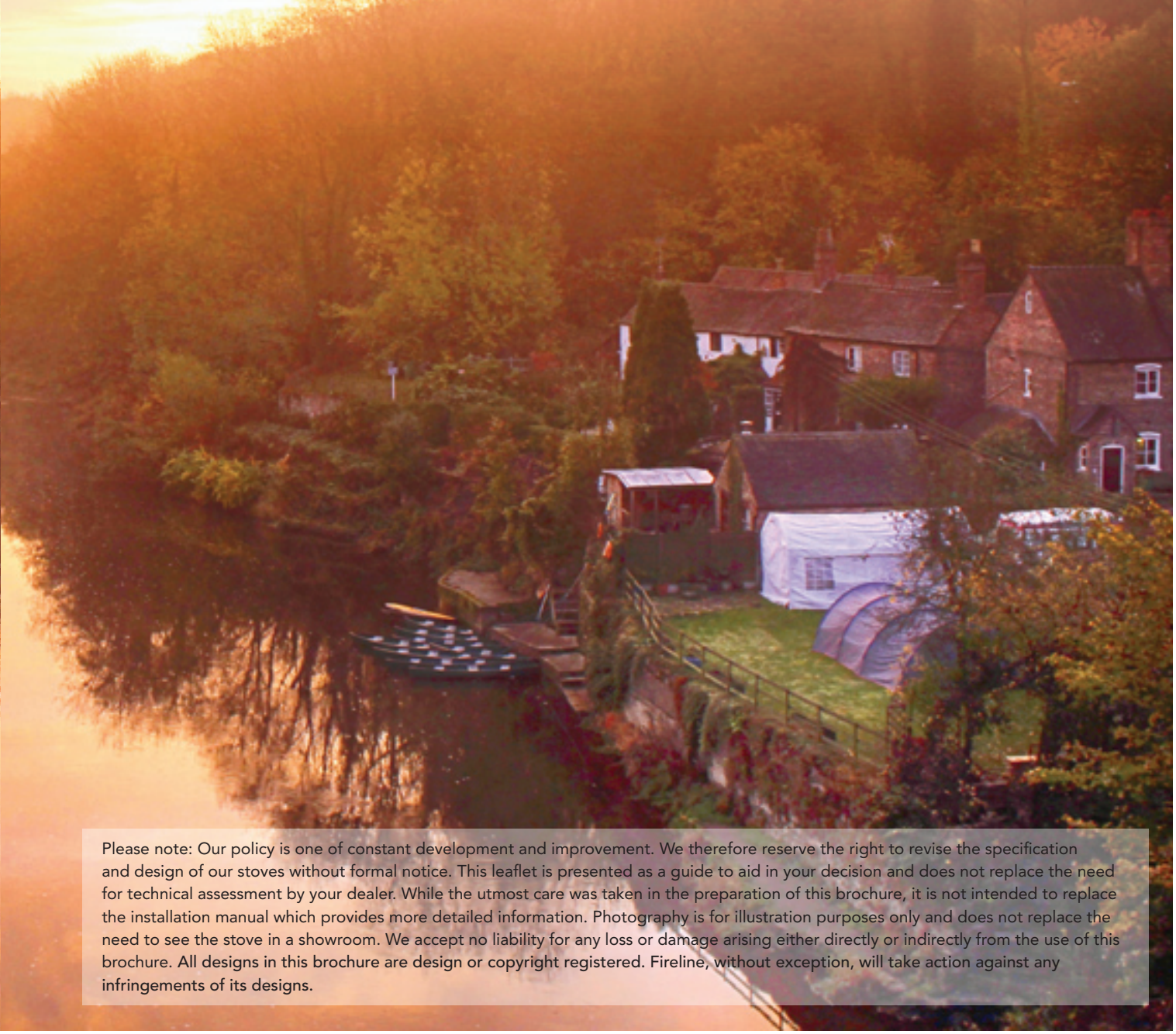

Please note: Our policy is one of constant development and improvement. We therefore reserve the right to revise the specification and design of our stoves without formal notice. This leaflet is presented as a guide to aid in your decision and does not replace the need for technical assessment by your dealer. While the utmost care was taken in the preparation of this brochure, it is not intended to replace the installation manual which provides more detailed information. Photography is for illustration purposes only and does not replace the need to see the stove in a showroom. We accept no liability for any loss or damage arising either directly or indirectly from the use of this brochure. All designs in this brochure are design or copyright registered. Fireline, without exception, will take action against any infringements of its designs.

# The Charlton and Jenrick way

Since being established in 1986, we have grown and now sell products across all fuel types.

Regardless of whether you need a gas, wood-burning, solid-fuel, or electric appliance we have a product to fit your needs.

See our full range at

**www.charltonandjenrick.co.uk**

Please scan the QR code to visit now.

## See our products live

We believe you need to see one of our products with your own eyes before purchasing, to fully understand how it fits into your home.

This is why we sell through a network of over 400 independent fireplace showrooms right across the UK.

# See our other solid-fuel ranges

## PUREVISION

State of the art design for the ultimate in luxury stoves.

GO ECO
STOVE RANGE

GO ECO
BAKECHEF
COOKING STOVE

GO ECO
ADVENTURER5
GLAMPING STOVE

A range of glamping, cooking and conventional stoves for home and glamping environments.

fireline™

British engineering at its best

Charlton & Jenrick LTD

Charlton & Jenrick Ltd, Unit D,
Stafford Park 2, Telford, Shropshire TF3 3AR
Tel: 01952 200444
e-mail: sales@charltonandjenrick.co.uk

www.charltonandjenrick.co.uk

CONNECT WITH US:

@cJfires cJfires 1CJGroup cJfires charltonandjenrick charlton-&-jenrick-ltd

Designed and produced by 3sixty Creative Marketing Solutions 01384 355930. J/3338